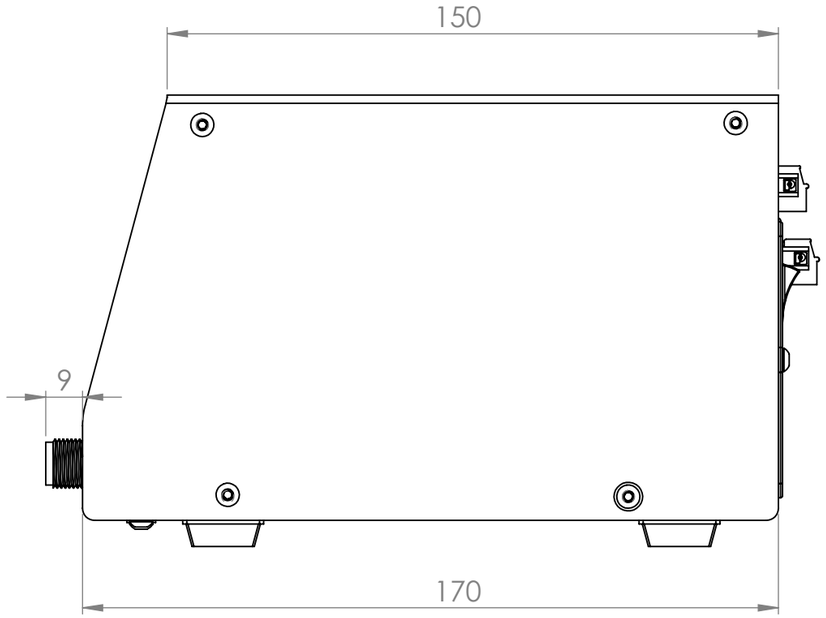

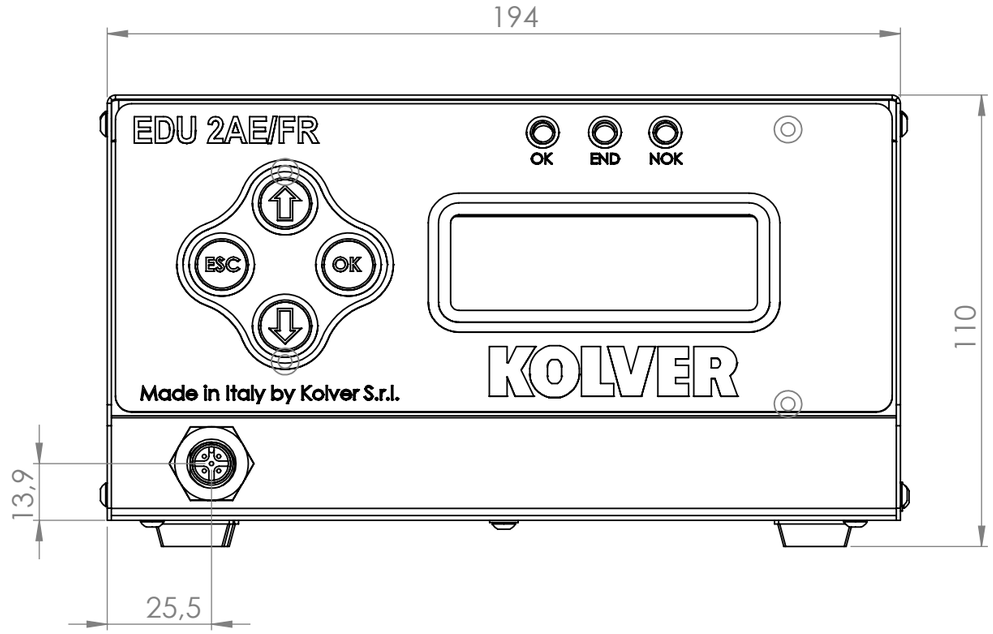

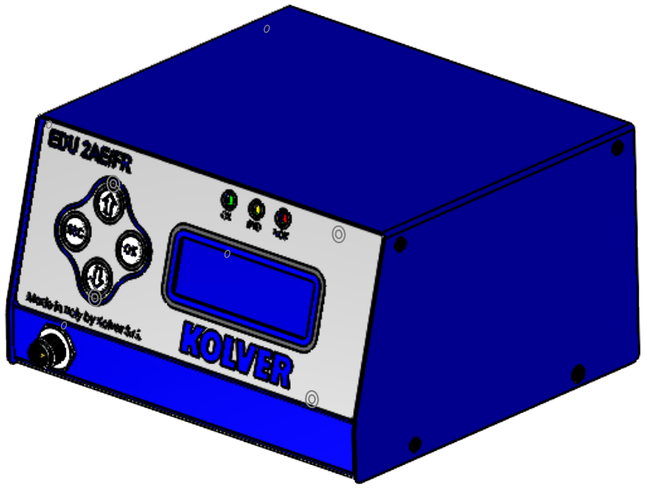

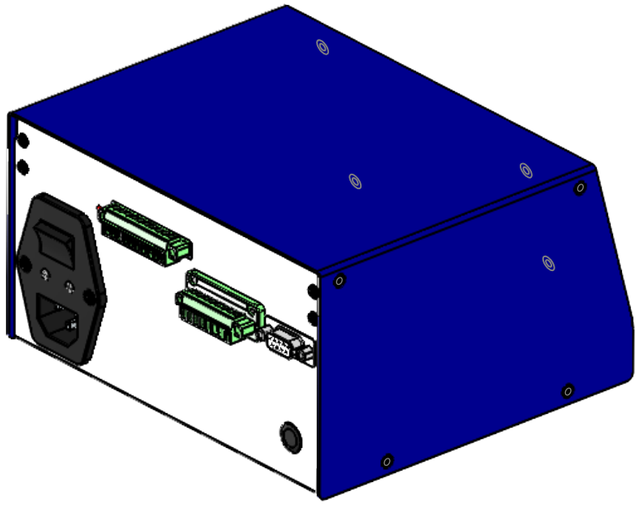

Tolleranze dove non segnate		
Lunghezza	Fino 10mm	±0.02mm
	Fino 100mm	± 0.3mm
	Fino 300mm	± 0.1mm
	Oltre	± 1mm
Diametro	Fori	JS11
	Alberi	js11

THE INFORMATION CONTAINED IN THIS DRAWING IS THE SOLE PROPERTY OF KOLVER S.R.L.
ANY REPRODUCTION IN PART OR AS A WHOLE WITHOUT THE WRITTEN PERMISSION OF KOLVER S.R.L. IS PROHIBITED.

REVISIONE	NOME	FIRMA	DATA
0	Marcon Davide		
1			
2			

Kolver S.R.L.

MATERIALE:

Nome: EDU 2AE/FR

Codice: 032000/FR

FORMATO: A3